Run the passive buzzer module

Table

1. What do you need to prepare 2

2. Introduction of the buzzer 3

3.Principle 3

4.Wiring Circle 3

5.Upload the buzzer test code and run 5

6. Upload the buzzer sing code and run 7

7. Any questions and suggestions are welcome 7

1. What do you need to prepare

Components	Quantity	Picture
A to B USB cable	1	
Passive Buzzer module	1	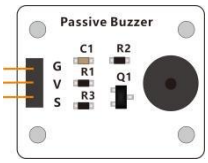
3Pin Female to female dupont wire	3	
Arduino UNO R3	1	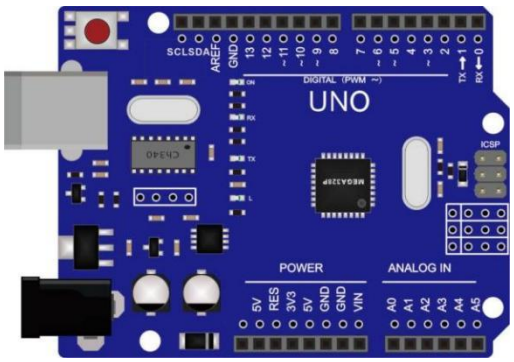
Expansion board for Arduino UNO	1	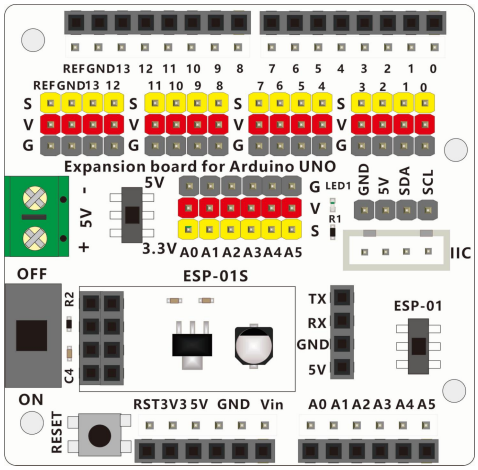

2. Introduction of the buzzer

Buzzer is a kind of voice device that converts audio model into sound signal. It is mainly used to prompt or alarm. According to different design and application, it can produce music sound, flute sound, buzzer, alarm sound, electric bell and other different sounds.

There are two types of piezoelectric buzzers that are commonly used in electronics projects – active buzzers and passive buzzers. Active buzzers are called active because they only need a DC voltage to produce sound. Passive buzzers need an AC voltage to produce sound.

3.Principle

Active Buzzer doesn’t need a varying voltage, you just give it constant voltage and it has an internal chopper (oscillator) circuit that turns the constant voltage to a square wave and feeds that to the piezo disc to generate a fixed-frequency tone.

Passive Buzzers need an AC voltage signal in order to vibrate and make sound. Therefore, it’s a little bit harder to control compared to Active buzzers. But it also allows us to generate whatever note frequency we want to play.

Compared to the fixed tone that active buzzers generate, passive buzzers are more suitable for projects where you need to control the audio tone frequency.

This lesson uses a passive buzzer module.

Schematic:

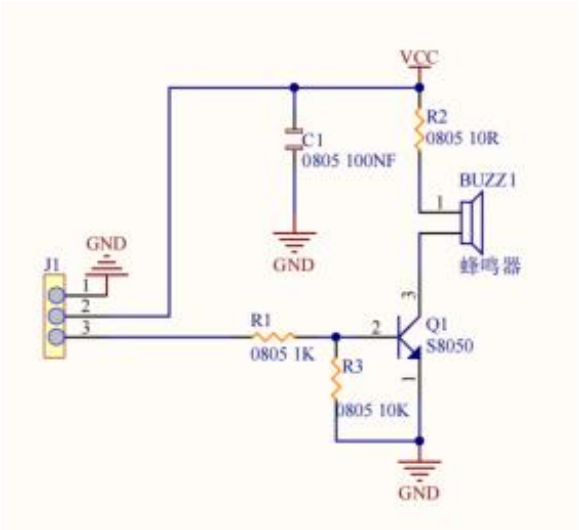

4.Wiring Circle

Insert the Arduino UNO expansion board onto the Arduino UNO R3 board, paying attention to the assembly direction.As shown in the following figure:

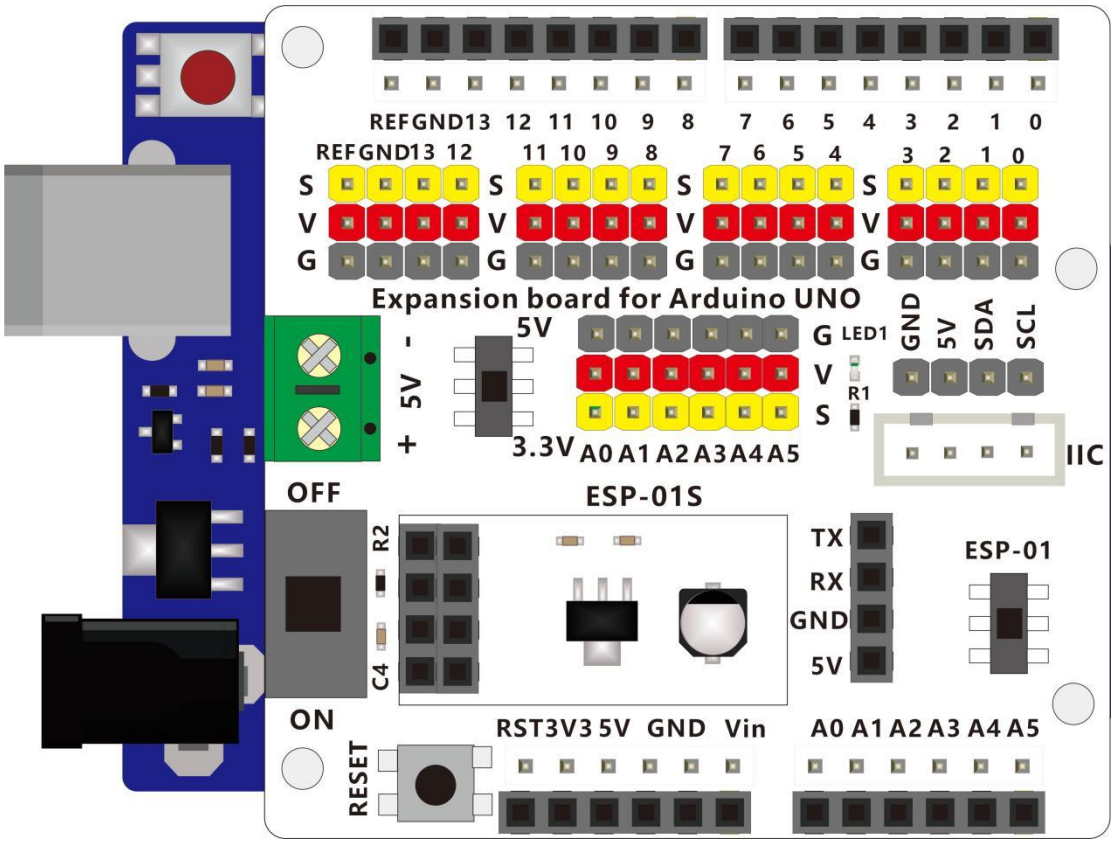

Turn the power switch on the expansion board to ON side and the 5V/3.3V switch to 5V side.

Connect the passive buzzer module to the Arduino UNO Expansion board using male to male DuPont wires. Connect the signal pin of the passive buzzer module to D9 on the expansion board. Please refer to the following table for specific connection methods:

Connect the LED modules to the Expansion board for Arduino UNO	
Passive Buzzer module	Expansion board for Arduino UNO
S	11
V	V
G	G

The hardware connection diagram is as follows:

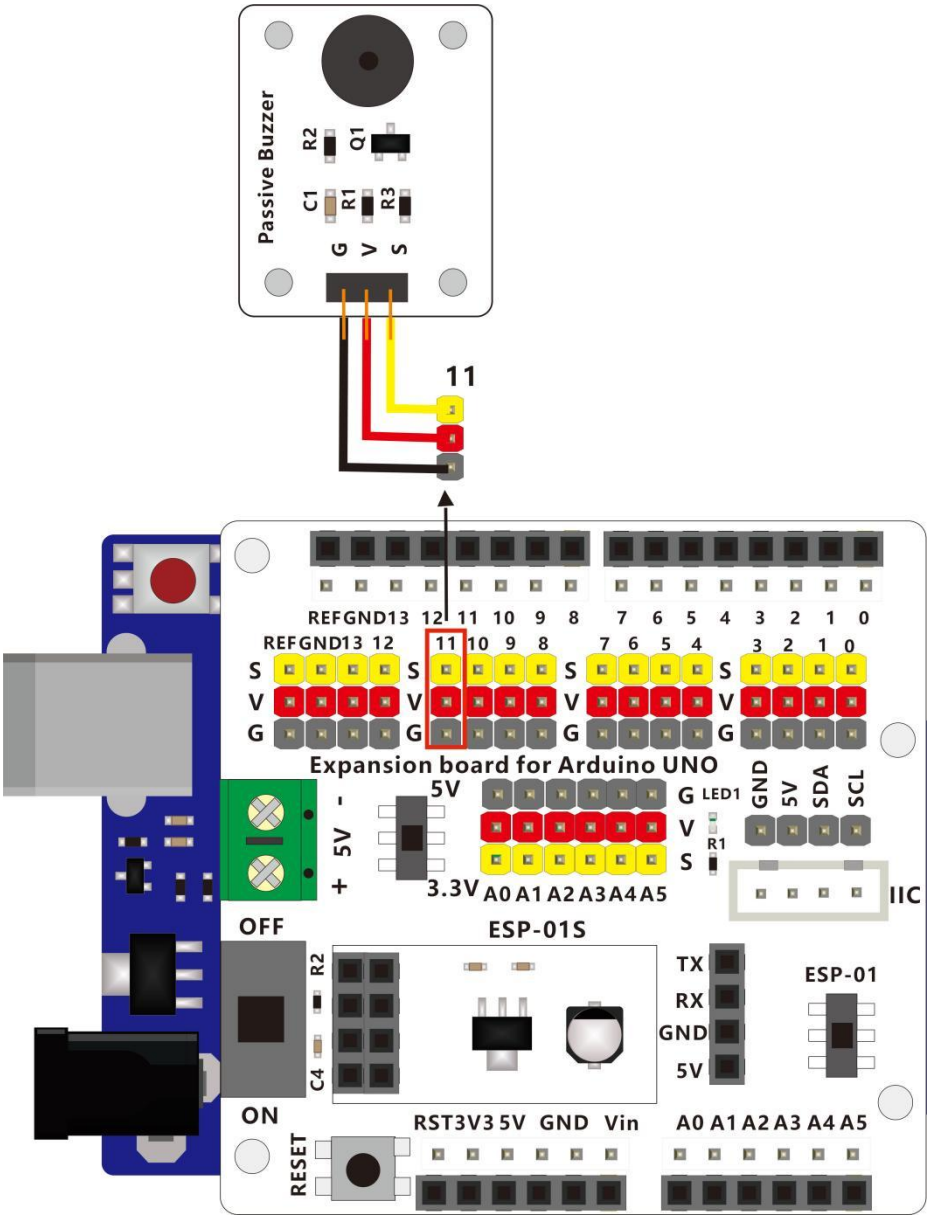

5.Upload the buzzer test code and run

Connect the computer and UNO board using an A to B USB cable.
The code used in this lesson is placed in the folder:
E:\CKK0021-main\Tutorial\sketches
Double-click the Arduino IDE shortcut on the desktop to open it.

3_1_buzzer_test

Click "File"---"open"

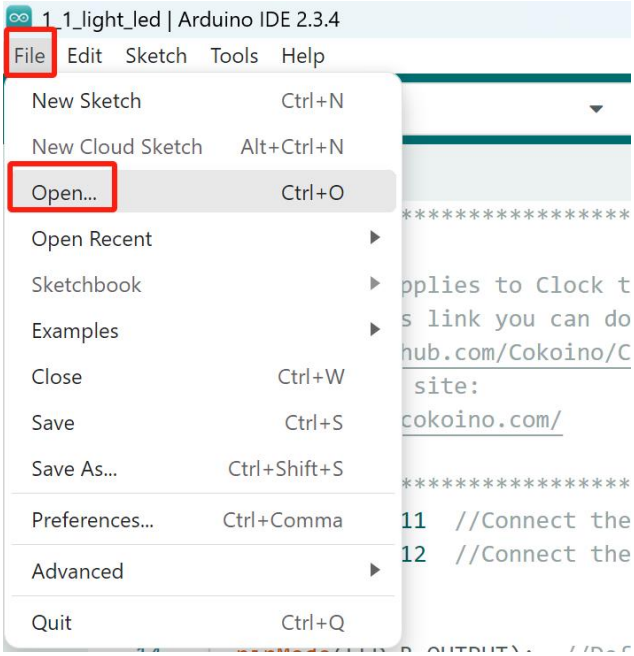

Select the code named 3_1_buzzer_test in the folder:
E:\CKK0021-main\Tutorial\sketches\3_1_buzzer_test
Click"open", Open the program interface as follows

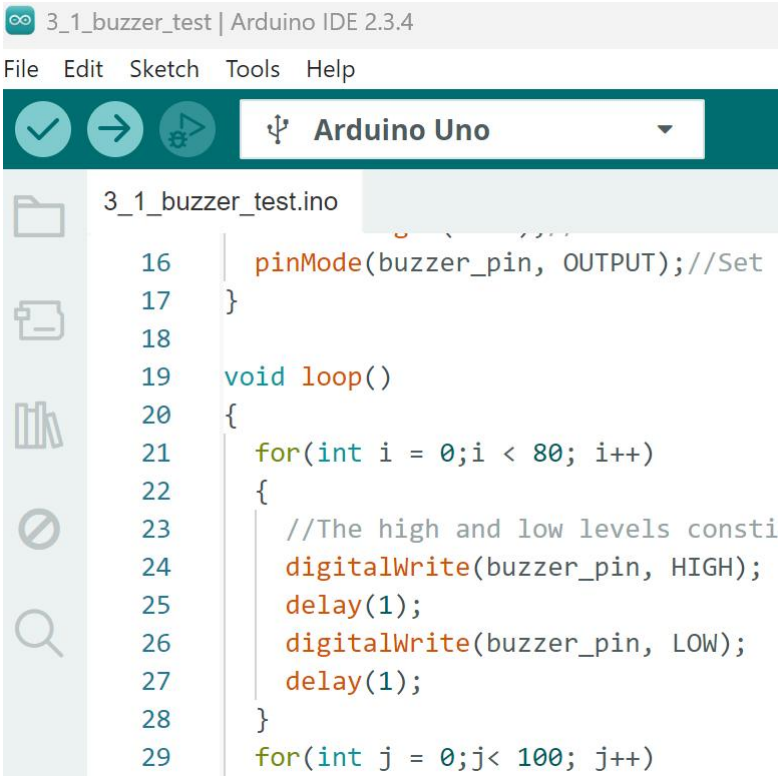

Click the comple button, "Done compiling" appears after the code compiling successfully.

Click the upload button, "Done uploading" appears after the code uploading successfully.

After the code is uploaded successfully, the program starts to run automatically, and you can hear the beeping sound from the buzzer on the module.

6. Upload the buzzer sing code and run

Let's try making the buzzer play the melody of a song next.

Open the buzzer_sing code with Arduino IDE,you can find the code in this folder:

E:\CKK0021-main\Tutorial\sketches \3_2_buzzer_sing

Compile and upload the code to the control board, after the upload is successful, the program runs, and you will hear the buzzer start singing.

7. Any questions and suggestions are welcome

THANK YOU for participating in this Lesson 3 experience!

If you find any errors, omissions or you have suggestions and/or questions about this lesson, please feel free to contact us:

cokoino@outlook.com

We will make every effort to make changes and correct errors as soon as feasibly possible and publish a revised version.

If you want to learn more about Arduino, Raspberry Pi, Smart Cars, Robotics and other interesting products in science and technology, please continue to visit our Amazon Store by search for "**LK COKOINO**" on Amazon. Or visit our official website: **www.cokoino.com**

We will continue to launch fun, cost-effective, innovative and exciting products.

Thank you again for choosing Cokoino products.

LK COKOINO